TABLE OF CONTENTS

0.1 Circulation List

0.2 Amendment Record

FOREWORD

1. **SCOPE**
2. **REFERENCES**
3. **TERMS AND DEFINITIONS**
4. **REQUIREMENTS**
5. **TESTS AND INSPECTION**
6. **MARKING AND PACKING**
7. **DOCUMENTATION**

ANNEX A: SCHEDULE OF GUARANTEED TECHNICAL PARTICULARS

(to be filled and signed by the Manufacturer and submitted together with relevant copies of the Manufacturer's catalogues, brochures, drawings, technical data & calculations, sales records for past five years, four customer reference letters, details of manufacturing capacity, the manufacturer's experience, copies of complete type test reports and accreditation certificate to ISO/IEC 17025 for the third party testing laboratory for tender evaluation, all in English Language)

0.1 Circulation List

COPY NO.	COPY HOLDER
1	Head of Department Standards
2	Head of Department Procurement
3	Regional Managers
Electronic copy (pdf) on KPLC server currently: http://172.16.1.40/dms/browse.php?fFolderId=23	

0.2 Amendment Record

Rev No.	Date (YYYY-MM-DD)	Description of Change	Prepared by (Name & Signature)	Approved by (Name & Signature)
Issue 1 Rev 0	2015-02-06	New Issue	Nancy Wairimu	Dr. Eng. Peter Kimemia

FOREWORD

This specification has been prepared by the Standards Department in collaboration with Network Maintenance Division both of The Kenya Power and Lighting Company Limited, abbreviated as KPLC and it lays down requirements for transmission line maintenance tools and implements. It is intended for use by KPLC in purchasing the Hand tools.

The supplier shall submit information which confirms satisfactory service experience with products which fall within the scope of this specification.

1. SCOPE

1.1. This specification lays down requirements for dimensions, materials, construction and finish of agricultural hand tools suitable for use on the construction of line work and bush clearing within KPLC. The shall include:

a) **Fork jembe**
b) **Spade**
c) **Panga**
d) **Slasher**
e) **Rake**
f) **Coffee Digger**

1.2. The specification also covers inspection and test of the transmission line maintenance tools and implements as well as schedule of Guaranteed Technical Particulars to be filled, signed by the manufacturer and submitted for tender evaluation.

1.3. The specification stipulates the minimum requirements for transmission line maintenance tools and implements acceptable for use in the company and it shall be the responsibility of the supplier to ensure adequacy of the design, good workmanship, good engineering practice and adherence to standards, specifications and applicable regulations in the manufacture of the transmission line maintenance tools and implements for The Kenya Power & Lighting Company Ltd.

The specification does not purport to include all the necessary provisions of a contract.

2. REFERENCES

The following standards contain provisions which, through reference in this text constitute provisions of this specification. Unless otherwise stated, the latest editions (including amendments) apply:

ISO 6508-1: Metallic materials -- Rockwell hardness test -- Part 1: Test method (scales A, B, C, D, E, F, G, H, K, N, and T)

ISO 1461 Hot dip galvanized coatings on fabricated iron and steel articles -- Specifications and test methods

BS 4659: Specification for tool and die steel.

KS 154: Specification for plain and fork hoes (jembe)

KS 151: Panga - Specification

KS 204: Specification for shovels.-Part 1-Mild steel shovels

KS 06-204-2: Specification for medium carbon shovels.

KS 152: Specification for garden rakes.

3. TERMS AND DEFINITIONS

For the purpose of this specification the definitions given in the reference standards shall apply.

4. REQUIREMENTS

4.1. SERVICE CONDITIONS

The transmission line maintenance tools and implements for the construction of line work and bush clearing shall be tropicalized, designed and constructed for continuous outdoor use in tropical areas and harsh climatic conditions

4.2. FORK JEMBE

4.2.1. Design and construction

4.2.1.1. The digging forks shall be 4-prong type and shall conform to the requirements of KS 154:2000.

4.2.1.2. The shape of the prongs shall be of flat or diamond cross-section and the tip of the prongs shall be flat or conical. In case of conical shape, the tapering shall be done on both the sides.

4.2.1.3. The prongs and shoulder shall be forged integrally with the shank, socket, strap or eye. All the prongs shall be of same length.

4.2.1.4. The handle of digging fork shall either be of T-type or crutch type in accordance with KS 154:2000.

4.2.1.5. The handles shall be permanently secured to the shank or socket or straps.

4.2.2. **Material**

4.2.2.1. The blade of the fork shall be made carbon steel given in Table 1 as per KS 154, whereas the sockets, straps and ferrules, wherever used, shall be made out of mild steel.

4.2.2.2. The hardness of forks shall be 45±3 HRC respectively when measured in accordance with ISO 6508-1:2005 at a distance of not more than 50 mm from the tip.

Table 1: Chemical composition of carbon steel as per KS 154

Constituent	Specified Range %
Carbon	0.40 – 0.80
Manganese	0.50 – 0.90
Silicon	0.35 maximum
Phosphorous	0.06 maximum
Sulphur	0.06 maximum

4.2.2.3. The handle length shall be a 1,500 ± 5 mm and shall be made of a suitable hardwood with a specific gravity of 0.66 to 0.80 after seasoning to not more than 20 percent moisture content.

4.2.3. **Performance requirements**

4.2.3.1. The forks shall be fitted with suitable handle and the working end shall be dropped against a block of mild steel from a height of 300 mm. The forks shall not show any sign of fracture or deformation.

4.2.3.2. The prongs shall be placed in a horizontal position and fork is supported by its handle or socket at a height of 1 m from the ground. A wooden block shall be placed on the prongs at their mid length. The longitudinal axis of the block shall lie at right angle to the longitudinal axis of prongs. A mass of 50 kg shall be suspended at the centre of wooden block for two minutes. After the test, the prongs shall show no sign main of permanent set of damage.

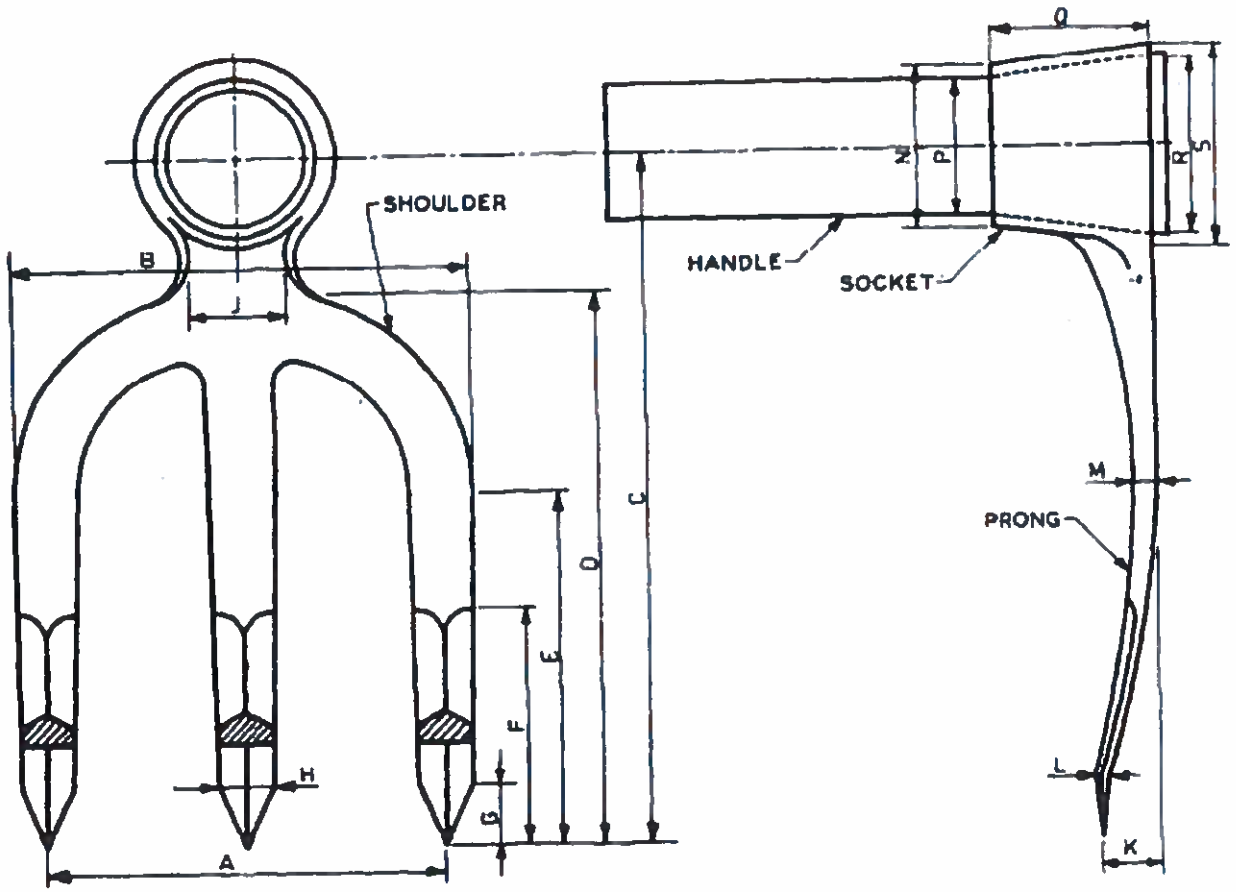

Fig. 1: Typical diagram of digging fork jembe

Table 2: Typical dimensions of a digging fork

Type	A	B	C	D	E	F*	G	H	J	K	L	M	N	P	Q	R	S
Small	150	166	200	165	125	60	20	13	25	15	5	6	40	35	40	40	50
Large	130	196	320	270	210	190	25	13	40	40	10	13	60	45	50	65	75

*Length of diamond section

All dimensions in millimetres

4.3. STRAIGHT PANGA (MACHETE)

4.3.1. Design and construction

4.3.1.1. A straight panga (machete) shall be designed and manufactured in accordance with KS 151:2006.

4.3.1.2. The cutting blade shall have an approximate length of 406.40 mm, width of 83.82 mm thickness 1.8 - 2.2 mm and the overall length shall be 549.4 mm

4.3.1.3. The handle shall be shaped and completed to a smooth finish with the rivets countersunk into the handle and metal edges recessed into the wood. It shall be machine riveted to the blade at three places. The rivets shall be of steel with maximum carbon content 0.15 percent and the washers of mild steel.

4.3.2. **Materials**

4.3.2.1. **The blade**

The blade shall be manufactured a carbon steel with the chemical composition as per KS 151:2006 and Table 3. The hardness of the blade shall be 45-50 HRC when measured in accordance with ISO 6508-1:2005 at a distance of not more than 50 mm from the tip.

4.3.2.2. **The handle**

The handle shall be made of a suitable hardwood with a specific gravity of 0.66 to 0.80 after seasoning to not more than 20 percent moisture content.

Table 3: Chemical composition of carbon steel as per KS 151

Constituent	Specified Range %
Carbon	0.50 – 0.80
Manganese	0.50 – 0.90
Silicon	0.35 maximum
Phosphorous	0.06 maximum
Sulphur	0.06 maximum

4.3.3. **Performance requirements**

4.3.3.1. **Bending Test**: The blade shall be inserted into a slot measuring 5 mm wide and 20 mm deep (Fig. 3). A deflection of 45° at the handle end in each direction shall be applied and the test repeated 50 times. There shall be no breakage, cracks or permanent set of the blade.

4.3.3.2. **Impact Test:** The tool shall be used to apply a minimum of twenty heavy blows across the grain of a round hardwood bar. No damage shall occur to the cutting edge nor should the handle be loosened.



Fig. 2: Typical diagram of a panga

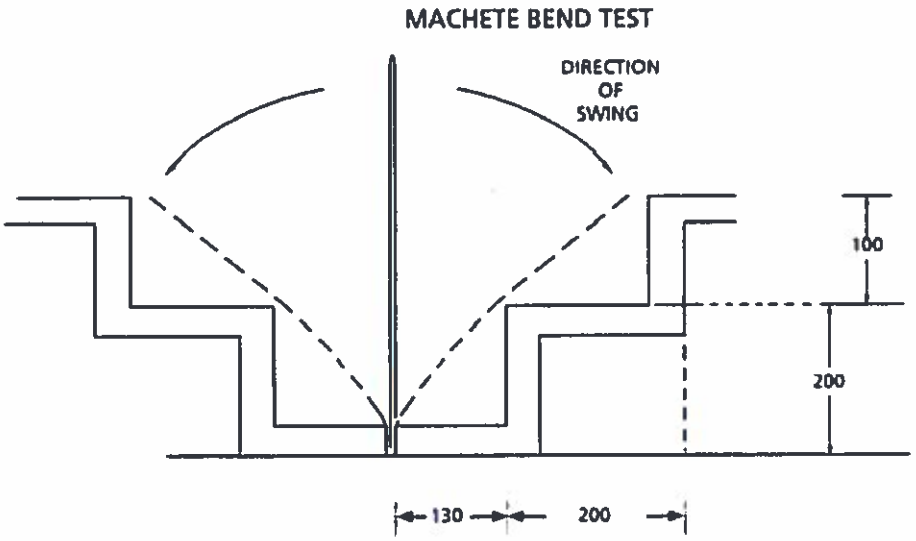

Fig. 3: Method of clamping to test the flexibility of machetes (slot dimensions: 5 mm x 20 mm)

4.4. GRASS SLASHER

4.4.1. Design and construction

4.4.1.1. A slasher shall be designed and manufactured in accordance with KS 151:2006.

4.4.1.2. The total length of the blade shall be 750mm (29½") in length, divided into two parts:

(i) Part 1: a straight uniform blade of approximately 600 mm in length from the tip of the handle, width of approximately 45 mm and thickness of approximately 1.8mm – 2.0mm

(ii) Part 2: A curved section of approximately 150 mm with sharp edges. The dimensions of the edges and the taper shall conform to the requirements of KS 151:2006.

4.4.1.3. The handle shall be shaped and completed to a smooth finish with the rivets countersunk into the handle and metal edges recessed into the wood. It shall be machine riveted to the blade at three places. The rivets shall be of steel with maximum carbon content 0.15 percent and the washers of mild steel.

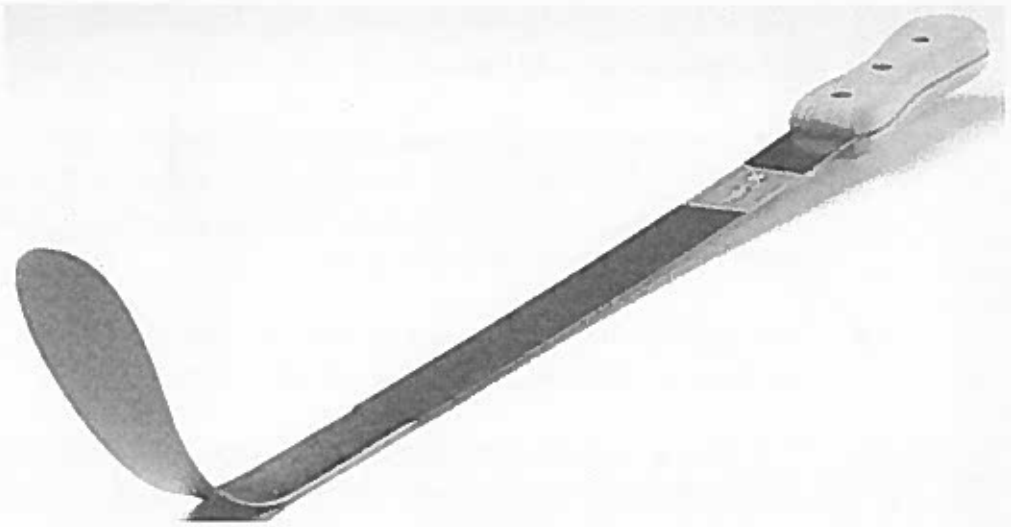

Fig. 4: Typical illustration of a grass slasher.

4.4.2. **The material**

The material for the blade and the handle shall be the same as those prescribed in clause 4.3.2.

4.4.3. **Performance requirements**

The performance requirements shall be as per the requirements of clause 4.3.3.1.

4.5. GARDEN RAKE

4.5.1. **Design and construction**

4.5.1.1. The rake shall be designed and manufactured in accordance with KS 152:2003.

4.5.1.2. The garden rake shall be a one-piece forged-spike type rake, with the spikes formed by forging the sheets.

4.5.1.3. The centre to centre distance of the spikes shall be uniform. The variation shall not exceed 1 mm.

4.5.1.4. The spikes shall be slightly curved at their louver ends and shall be so curved that the angle formed with the frame be in the range of 45 to 60" (Fig. 5).

4.5.1.5. The ferrule shall be rigidly attached with the shoulder. The shoulder shall be extended to form the ferrule. The minimum thickness of the ferrule shall be 1.5 mm. The ferrule may be cylindrical or conical. The diameter of rivet used for fixing the ferrule and handle shall be 3 to 6 mm.

4.5.1.6. The height or depth of the spikes (see Fig. 5) shall be 70 mm. The variation in declared height or depth shall be not more than ±2 mm.

4.5.1.7. The handle shall be rigidly attached to the ferrule with the help of a minimum three rivets. The length and diameter of the handle shall be in the range of 1.5 to 1.75 m and 25 to 35 mm respectively.

4.5.2. **Materials**

4.5.2.1. **Head**

The head (shoulder, ferrule and teeth) shall be manufactured a carbon steel with the chemical composition as per KS 152:2003 and Table 4. The hardness of the blade shall be not less than 25 HRC when measured in accordance with ISO 6508-1:2005.

4.5.2.2. **Handle**

The handle shall be made of a suitable hardwood with a specific gravity of 0.66 to 0.80 after seasoning to not more than 20 percent moisture content.

Table 4: Chemical composition of a rake material

Constituent	Specified Range %
Carbon	0.30 – 0.50
Manganese	0.50 – 0.80
Silicon	0.35 maximum
Phosphorous	0.06 maximum
Sulphur	0.06 maximum

4.5.3. **Performance requirements**

4.5.3.1. **Drop Impact Test** - Extreme end of the handle shall be attached to a wood base and loosely pivoted at surface level with a flat horizontal steel plate. The head shall be elevated to a height of one metre and dropped with spikes point falling on the steel plate. This shall be repeated for four times. The spikes and other portions shall not flatten, chip, crack, fracture or deform as a result of this test.

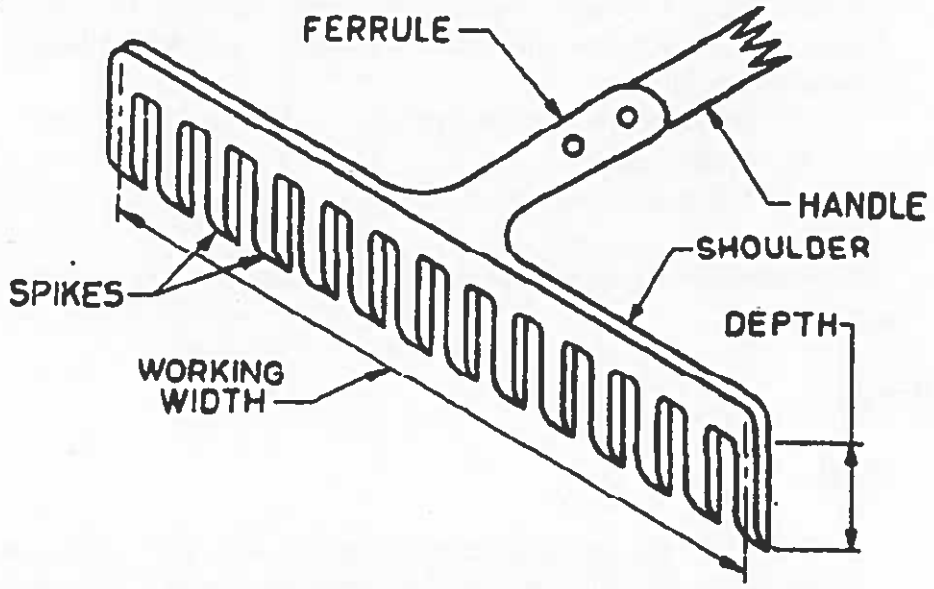

Fig. 5: Typical illustration of a one-pice forged garden rake

4.5.3.2. **Pull Test** - The shoulder shall be secured in a stationary fixture and the ferrule of the rake shall be kept vertical. A 35 kg mass shall be attached to the centre of any one spike and suspended for 2 minutes. As a result of this test, the spike tested shall not show deformation or permanent set after the removal of the mass.

4.6. SPADE

4.6.1. Design and construction

4.6.1.1. The spade shall be designed and manufactured in accordance with KS 204:1992 and KS 06-204-2:1992.

4.6.1.2. The blade (inclusive of the socket) shall be manufactured in one piece without any welded or riveted joint. The tip of the socket shall be slightly rounded.

4.6.1.3. The holes for riveting the handle to the shovel shall be provided, one at a distance of 65 mm to 75 mm from the tip/end of the socket, the axis of which shall be approximately at right angles to the axis of the handle and parallel to the face of the blade as shown in Fig. 6 and the second hole at approximately right angles to the first hole at a distance of about 50 mm from it towards the tip/end of the socket.

4.6.1.4. The handle shall be driven fully into the socket and neatly secured by two rivets. The dimensions of the handle shall conform to Fig. 10 with the dimension tolerances permissible as follows:

a) Where the head of the tool fits - +3 mm , -0 mm
b) At other places - ±2 mm
c) Tolerance on length - ±5 mm

4.6.1.5. The complete shape and dimensions of the spade shall be as shown in the Fig.7 and table 6.

4.6.2. Materials

4.6.2.1. Head

The head shall be manufactured a carbon steel with the chemical composition as per KS 204:1992, KS 06-204-2:1992 and Table 5. The hardness of the blade shall be not less than 48 HRC when measured in accordance with ISO 6508-1:2005.

4.6.2.2. **Handle**

The handle shall be made of a suitable hardwood with a specific gravity of 0.66 to 0.80 after seasoning to not more than 20 percent moisture content.

Table 5: Chemical composition of a spade material

Constituent	Specified Range %
Carbon	0.40 – 0.65
Manganese	0.50 – 0.80
Silicon	0.35 maximum
Phosphorous	0.06 maximum
Sulphur	0.06 maximum

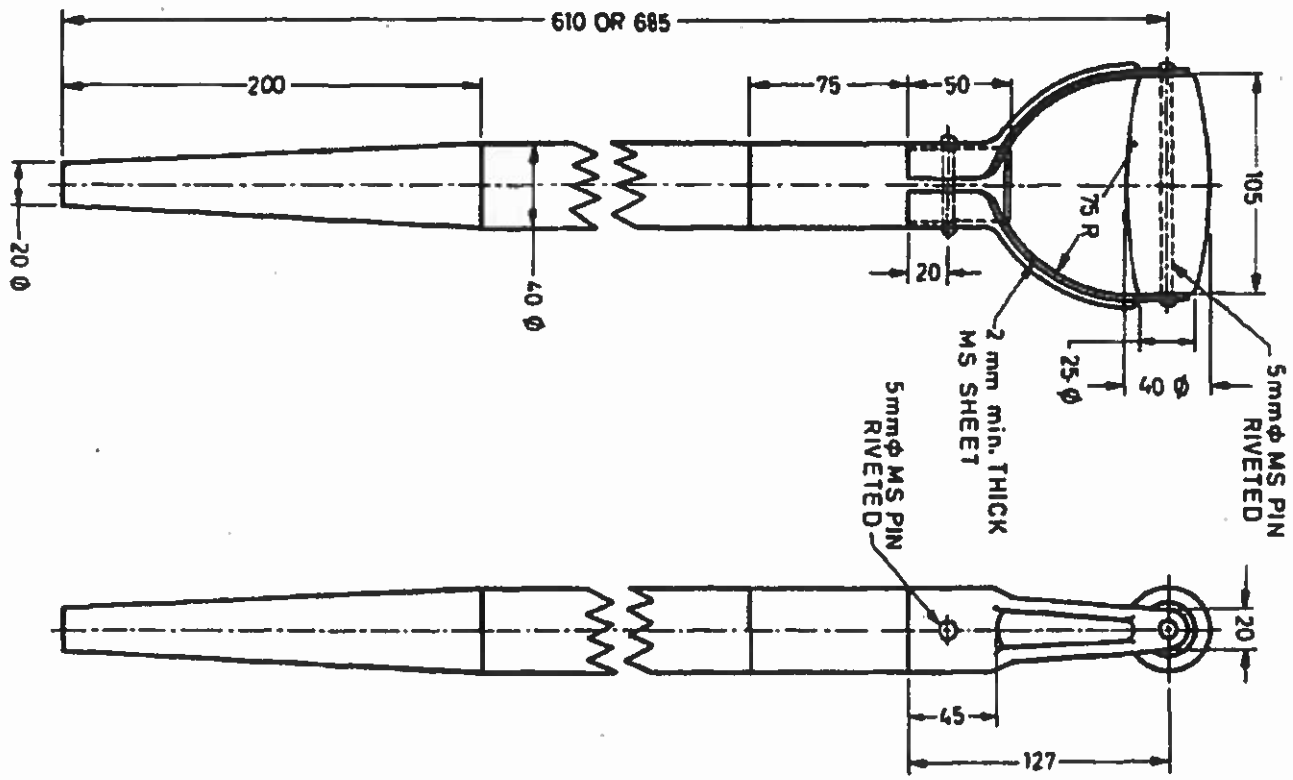

Fig. 6: Shape and dimensions of crutch type handle

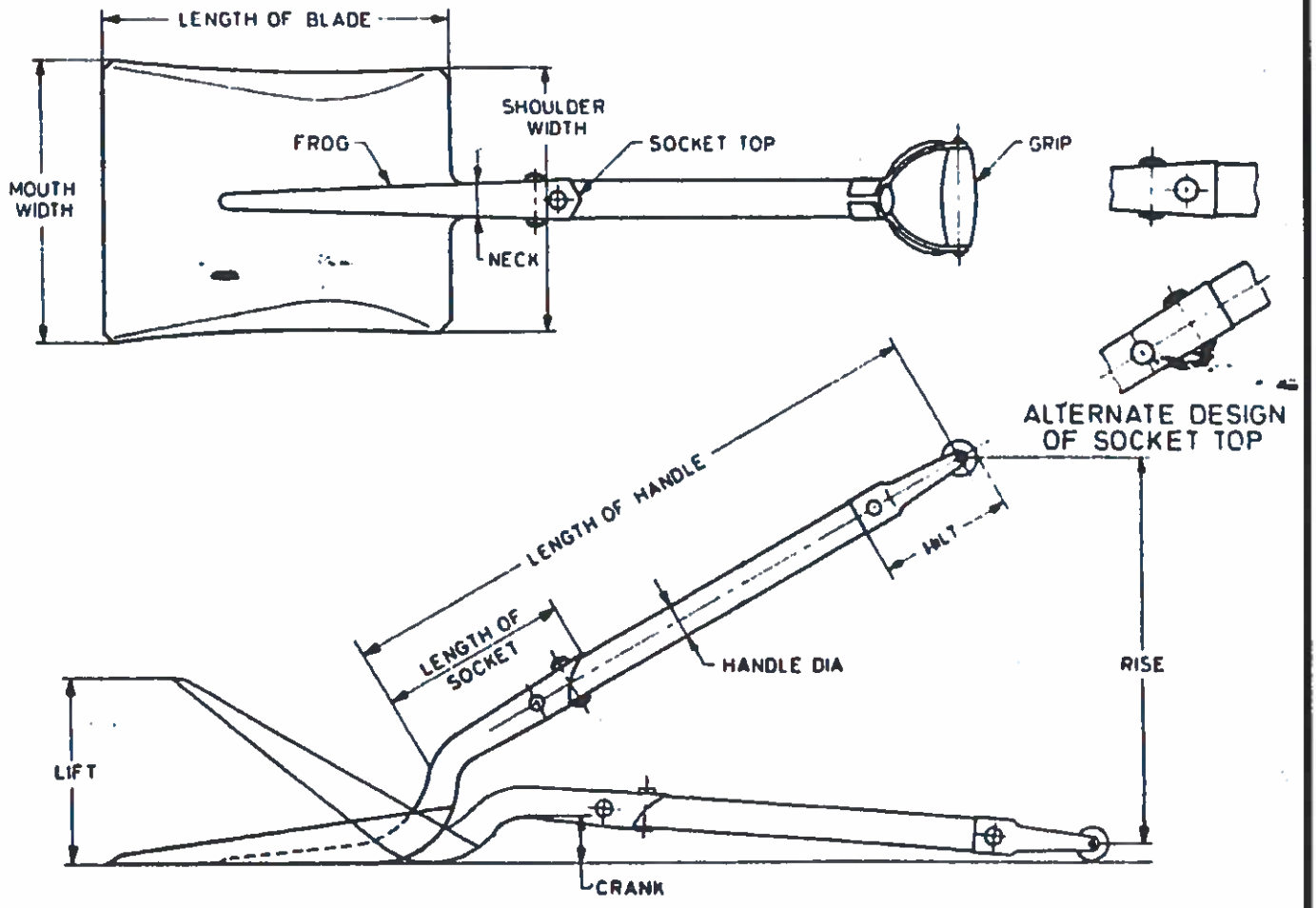

Fig. 7: Nomenclature for shovels

Table 6: Dimensions of spade

Part	Dimension in millimetres
Mouth width	280
Length of blade	340
Frog	200
Shoulder width	255
Crank	55
Length of the socket	200
Mass	(1.8 - 2.0 kg)

4.6.3. **Performance requirements**

4.6.3.1. **Bending test**: The shovel shall be securely fixed with it face upwards in horizontal position, up to about half the length of the blade. A vertical load of 500 N shall be gradually applied in downwards direction at the end of handle. The load shall be maintained for one minute and during loading the handle shall not break, or the rivets get removed. On removal of the load, the permanent set at the extreme end of the shovel handle shall not exceed 100 mm.

4.6.3.2. **Flexing test**: The shovel blade shall be securely fixed up to position of about 40mm measured from the nose of the blade with its face upwards in the horizontal position. The unsecured parts of the shovel blade shall be flexed through an angle of 5^0 to 10^0 by a suitable force in upward direction at the free end of the handle and then released. This test shall be repeated three times and on completion of the test, the blade shall show no sign of permanent set, damage or defect.

4.7. COFFEE DIGGER

4.7.1. **Design and construction**

4.7.1.1. The coffee digger shall have a blade and shall conform to the requirements of KS 154:2000.

4.7.1.2. The coffee digger is 310mm long including the handle.



Fig 8: Typical arrangement of a coffee digger

4.7.2. **Materials**

4.7.2.1. The blade of the fork shall be made carbon steel given in Table 1 as per KS 154, whereas the sockets, straps and ferrules, wherever used, shall be made out of mild steel.

4.7.2.2. The hardness of forks shall be 45±3 HRC respectively when measured in accordance with ISO 6508-1:2005 at a distance of not more than 50 mm from the tip.

Constituent	Specified Range %
Carbon	0.40 – 0.80
Manganese	0.50 – 0.90
Silicon	0.35 maximum
Phosphorous	0.06 maximum
Sulphur	0.07 maximum

4.7.2.3. The handle length shall be a 100 mm and shall be made of a suitable hardwood with a specific gravity of 0.66 to 0.80 after seasoning to not more than 20 percent moisture content.

4.7.3. **PERFORMANCE REQUIREMENTS**

The coffee digger shall be fitted with suitable handle and the working end shall be dropped against a block of mild steel from a height of 300 mm. The forks shall not show any sign of fracture or deformation

4.8. QUALITY MANAGEMENT SYSTEM

4.8.1. The supplier shall submit a quality assurance plan (QAP) that will be used to ensure that the design, material, workmanship, tests, service capability, maintenance and documentation, will fulfill the requirements stated in the contract documents, standards, specifications and regulations. The QAP shall be based on and include relevant parts to fulfill the requirements of ISO 9001:2008.

4.8.2. The Manufacturer's Declaration of Conformity to reference standards and copies of quality management certifications including copy of valid and relevant ISO 9001: 2008 certificate shall be submitted with the tender for evaluation.

5. TESTS AND INSPECTION

5.0. Type tests, sampling tests and routine tests shall be done in accordance with the requirements of BS 4659, ISO 1461, ISO 6508-1, KS154, KS151, KS204, KS152 and this specification. It shall be the responsibility of the supplier to perform or to have performed all the tests specified.

5.1. Copies of Type Test Certificates & Type Test Reports issued by a third party testing laboratory that is accredited to ISO/IEC 17025 shall be submitted with the tender for the purpose of technical evaluation. A copy of the accreditation certificate to ISO/IEC 17025 for the testing laboratory shall also be submitted (all in English language).

Copies of type test reports to be submitted with the tender (by bidder) for evaluation shall be as stated:

a) Verification of dimensions
b) Chemical composition of the carbon steel for each tool
c) Performance test as per clause 4.2.3, 4.3.3, 4.4.3, 4.5.3, and 4.6.3

NOTE: *Any translations of certificates and test reports into English language shall be signed and stamped by the third party Testing Laboratory that carried out the tests.*

5.2. The transmission line maintenance tools and implements shall be subject to acceptance tests at the manufactures' works before dispatch. Acceptance tests (routine & sample tests) will be witnessed by two Engineers appointed by The Kenya Power and Lighting Company Limited (KPLC). Routine and sample test reports for the transmission line maintenance tools and implements to be supplied shall be submitted to KPLC for approval before shipment of the goods.

5.3. Tests to be witnessed by KPLC Engineers at the factory before shipment shall be in accordance with BS 4659, ISO 1461, ISO 6508-1, KS154, KS151, KS204,, and this specification and shall include the following:

a) Verification of dimensions
b) Chemical composition of the carbon steel for each tool
c) Performance test as per clause 4.2.3, 4.3.3, 4.4.3, 4.5.3, and 4.6.3

5.4. On receipt of the tools KPLC will inspect them and may perform or have performed any of the relevant tests in order to verify compliance with the specification. The supplier shall replace without charge to KPLC, tools or implements which upon examination, test or use fail to meet any of the requirements in the specification.

MARKING AND PACKING.

6.1 MARKING

The following information shall be marked indelibly and legibly and in a permanent manner on the head/blade section of each tool in English Language:

(a) Name or trade mark of the manufacturer;
(b) Type Reference Number and Specified Mechanical Failing Load;
(c) Year of manufacture;
(d) Batch or serial number;
(e) The letters **'KPLC'**

6.2 PACKING

The tools shall be packed in a manner so as to protect it from damage during transportation and storage. Instructions for storage and handling shall be included in each package, all in English Language.

7. DOCUMENTATION

7.1 The bidder shall submit its tender complete with technical documents required by Annex A (Guaranteed Technical Particulars) for tender evaluation. The documents to be submitted (all in English language) for tender evaluation shall include the following:

a) Guaranteed Technical Particulars fully filled and signed by the manufacturer;
b) Copies of the Manufacturer's catalogues, brochures, drawings and technical data;
c) Sales records for previous five years and reference letters from at least four of the customers;
d) Details of manufacturing capacity and the manufacturer's experience;
e) Copies of required type test certificates and type test reports by a third party testing laboratory accredited to ISO/IEC 17025;
f) Copy of accreditation certificate to ISO/IEC 17025 for the third party testing laboratory;
g) Manufacturer's warranty and guarantee;
h) Manufacturer's letter of authorization, copy of the manufacturer's ISO 9001:2008 certificate and other technical documents required in the tender.

7.2 The successful bidder (supplier) shall submit the following documents/details (from the manufacturer as per tender) to The Kenya Power & Lighting Company for approval before manufacture:

a) Guaranteed Technical Particulars fully filled and signed by the manufacturer;

b) Design drawings & construction details of the transmission line maintenance tools and implements including 3-D views;
c) Quality assurance plan (QAP) that will be used to ensure that the design, material, workmanship, tests, service capability, maintenance and documentation will fulfill the requirements stated in the contract documents, standards, specifications and regulations. The QAP shall be based on and include relevant parts to fulfill the requirements of ISO 9001:2008;
d) Test Program to be used after manufacture;
e) Marking details and method to be used in marking each transmission line maintenance tools and implements;
f) Manufacturer's undertaking to ensure adequacy of the design, adherence to applicable regulations, standards and specification, ensure good workmanship and good engineering practice in the manufacture of the transmission line maintenance tools and implements for The Kenya Power and Lighting Company Limited;
g) Packaging details (including packaging materials and marking and identification of component packages).

NOTE: *The drawings to be submitted by the supplier to KPLC for approval before manufacture shall be in standard format clearly indication drawing number, parts list with material details & quantities, standard of manufacture, ratings, approval details and identity of the manufacturer (as per manufacturer's authorization submitted during tendering).*

----------**SPACE LEFT BLANK**----------

ANNEX A: SCHEDULE OF GUARANTEED TECHNICAL PARTICULARS FOR OFFERED TRANSMISSION LINE MAINTENANCE TOOLS AND IMPLEMENTSS

(to be filled and signed by the Manufacturer and submitted together with relevant copies of the Manufacturer's catalogues, brochures, drawings, technical data, sales records for past five years, four customer reference letters, details of manufacturing capacity, the manufacturer's experience, copies of complete type test reports and accreditation certificate to ISO/IEC 17025 for the third party testing laboratory for tender evaluation, all in English Language)

TENDER NO. .....BIDDER'S NAME & ADDRESS .....

Clause	Description	Guaranteed Technical Particulars for tools offered
	Name of Manufacturer & Country of manufacture of the tools being offered	specify
	Type/Model Reference Number	specify
1	Scope: Supplier to ensure adequacy of the design, good workmanship, good engineering practice and adherence to standards, specifications and applicable regulations in the manufacture of the transmission line maintenance tools and implementss for KPLC	specify
2	Design standards complied with	specify
3	Terms and Definitions	specify
4	Requirements	specify
4.1	Service conditions	specify
4.2	Fork Jembe (hoe)	specify
4.2.1	Design and construction	specify
4.2.2	Materials	specify
4.2.3.1	Drop impact test	Prove compliance – attach test report
4.2.3.2	Bending test	Prove compliance– attach test report
4.3	Straight machete (Panga)	
4.3.1	Design and construction	specify
4.3.2	Materials	specify
4.3.3.1	Bending test	Prove compliance– attach test

		report
4.3.3.2	Impact test	Prove compliance– attach test report
4.4.	Grass Slasher	
4.4.1	Design and construction	specify
4.4.2	Materials	specify
4.4.3	Bending test	Prove compliance– attach test report
4.5	Garden rake	
4.5.1	Design and construction	specify
4.5.2	Materials	specify
4.5.3.1	Drop impact test	Prove compliance– attach test report
4.5.3.2	Pull test	Prove compliance– attach test report
4.6	Spade	
4.6.1	Design and construction	specify
4.6.2	Materials	specify
4.6.3.1	Bending test	Prove compliance– attach test report
4.6.3.2	Flexing test	Prove compliance– attach test report
4.7	Coffee digger	
4.7.1	Design and construction	specify
4.7.2	Materials	specify
4.7.3	Drop impact test	Prove compliance– attach test report
4.8	Quality Management System	
	Quality Assurance Plan	provide
	Copy of ISO 9001:2008 Certificate	provide
	Manufacturer's experience	provide
	Manufacturing Capacity (units per month)	specify
	List of previous customers	provide
	Customer reference letters	provide
5.1	Test standards and responsibility of carrying out tests	provide
5.2	Copies of Type Test Reports submitted with tender	provide
5.3	Acceptance tests to be witnessed by KPLC at factory before shipment	provide
5.4	Test reports to be submitted by supplier to KPLC for	provide

	approval before shipment	
5.5	Replacement of rejected transmission line maintenance tools and implements	specify
6.1	Marking	specify
6.2	Packing	specify
7.1	Documents submitted with tender	provide
7.2	Documents to be submitted by supplier to KPLC for approval before manufacture	provide
	Statement of compliance to specification	provide

.....

Manufacturer's Name, Signature, Stamp and Date